1500-3000W

CW Fiber Lasers

FFRC-1500H-C / FFRC-2000H-C / FFRC-3000H-C

Characteristics

- High wall-plug efficiency
- Maintenance-free
- High beam quality of m^2<1.3
- Intelligent control system
- Multi-stages anti-back reflection protections

Applications

- Sheet metal processing-welding
- Laser cleaning

Specifications

Product Code	FFRC-1500H-C	FFRC-2000H-C	FFRC-3000H-C
Optical Parameters			
Output Power (W)	1500	2000	3000
Operating Mode	CW/Modulated		
Polarization State	Random		
Output Power Tunability (%)	10 - 100		
Beam Quality M^2	< 1.3 (20μm)		
Laser Beam Quality BPP (mm x mrad)	< 1.2 (50μm)		
Divergence Half-angle (rad)	< 0.06 (50μm)		
Output Power Instability 25℃ (%)	< 2 (2 hours)		
Emission Wavelength (nm)	1080 ± 10		
Spectrum Width FWHM (nm)	< 4		
Modulation Frequency (kHz)	25		
Duty Cycle (%)	10 - 100		
Red Laser Power (μW)	> 200		
Fiber Delivery Cable Parameters			
Output Type	QBH		
Length (m)	10		
Core Diameter (μm)	20/30/50		20/50
Minimum Bending Radius (mm)	200		
Electrical Characteristics			
Operating Voltage (VAC)	200 - 240, 1PH, 50/60Hz		340 - 420, 3P4W, 50/60Hz
Max Power Consumption (kW)	5	6.5	9
Control Mode	RS232/AD/Ethernet		
Other Characteristics			
Operating Temperature(℃)	10 - 40		
Humidity (%)	10 - 80		
Cooling Method	Water Cooled		
Water-cooling Temperature (℃)	25 ± 1		
Water-cooling Flow (L/min)	> 20 (Laser), 1.5 - 2.5 (QBH)		> 30 (Laser) 1.5 - 2.5 (QBH)
Water-cooling Pressure (Bar)	3 - 5		
Joint Diameter (mm)	12	16	
Dimension (mm)	W482 x D575 x H133 (include handles)		
Weight (kg)	30 ± 3	40 ± 3	50 ± 3

EVERFOTON

Everfoton Technologies Corporation Limited

Address. No.9 Optics Valley Avenue, Wuhan, Hubei, China

Post Code. 430073

Nanjing Fiberfoton Technologies Corporation Limited

Address. 9 Kechuang avenue, F 3, Jiangbei New District, Nanjing, Jiangsu **Post Code**. 211505

Telephone. 027-65271788

Website. www.everfoton.com

Product pictures and information are for reference only, the company reserves the right to modify the manual and products, please refer to the actual situation.
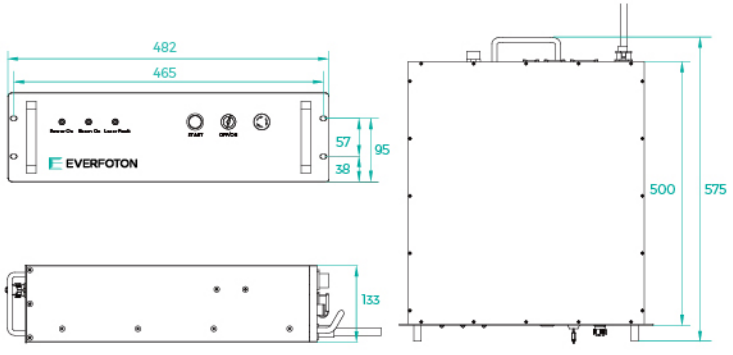
Everfoton Wechat